Uncontrolled Copy

GENERAL INFORMATION:

SHAFT RUNOUT:	.001 [.03] T.I.R. PER INCH LENGTH OF EXTENSION
BEARINGS:	BALL
MOUNTING POSITION:	ALL ANGLE

ELECTRICAL DATA:

OVERLOAD PROTECTOR:	AUTOMATIC RESET (SENSATA 7AM 036)
LINE LEADS:	NO. 18 GA., .03 [.8] THK. XLP 125°C INSUL.
REVERSING PLUGS:	NO. 18 GA., .03 [.8] THK. XLP 125°C INSUL.
GROUND LEAD:	NO. 18 GA., .03 [.8] THK. (GREEN) INSUL.

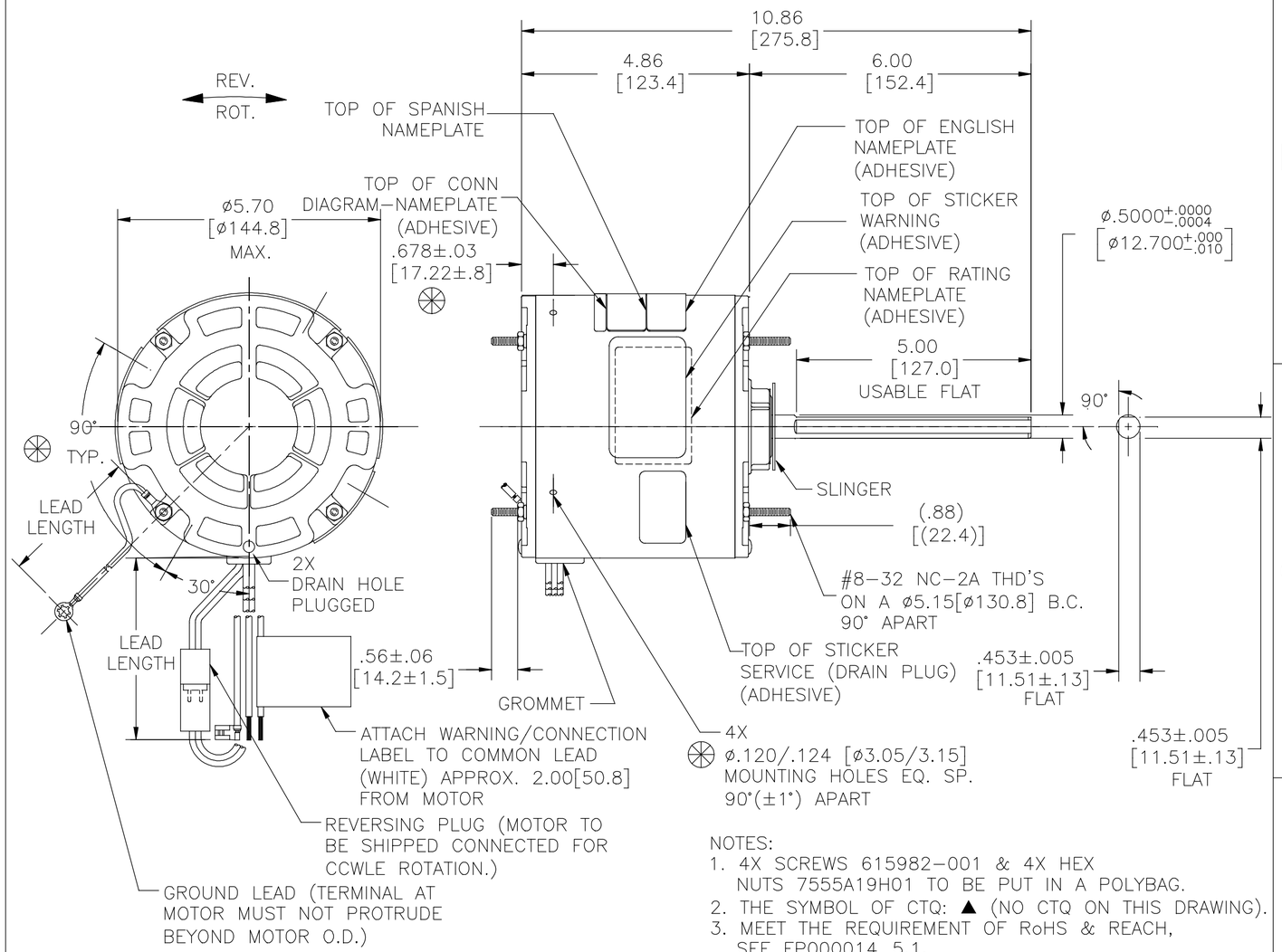

NOTES:
1. 4X SCREWS 615982−001 & 4X HEX NUTS 7555A19H01 TO BE PUT IN A POLYBAG.
2. THE SYMBOL OF CTQ: ▲ (NO CTQ ON THIS DRAWING).
3. MEET THE REQUIREMENT OF RoHS & REACH, SEE EP000014_5.1.

⊛ DENOTES CRITICAL CHARACTERISTICS

NAMEPLATE DATA:

MODEL NO.: F48AF43A01
CUST. P/N: EM3465F
HP: 1/3, 1/5
ROT.: REVERSIBLE
RPM: 1075/2 SPD.
TYPE: UF
FRAME: 48Y
VOLTS: 208−230
PH: 1
AMPS: 2.6, 1.4
HZ: 60
INS.: F
AMB.: 70°C
DUTY: AIR OVER
CAP.: 7.5 OR 5 MFD/370V
ENCL: ENCLOSED
UL LOGO
CSA LOGO
THERMALLY PROTECTED

EXTERNAL CONNECTION DIAGRAM

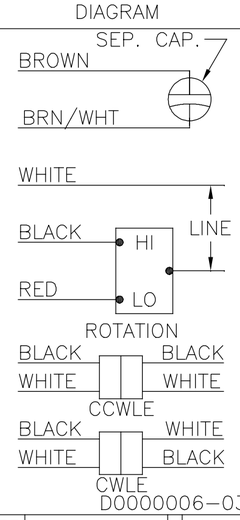

PERFORMANCE CURVE NO.	TORQUE @ 1075 RPM (25°C)	APPROVED SAMPLE	UL COMPONENT		CSA	
			FILE #	CCN #	FILE #	CLASS #
C23418	39.4 OZ. FT.	0343266A	E46412	PRGY2	LR43341	4211−01

GREEN (GROUND)	12.0/13.0 [305/330]	#10 EYELET
BLACK/WHITE	3.0/5.0 [76/127]	REVERSING PLUG
BROWN	34.5/37.5 [876/953]	.25 [6.4] FLAG
BROWN/WHITE	34.5/37.5 [876/953]	.25 [6.4] FLAG
RED	34.5/37.5 [876/953]	.50 [12.7] SKIN
BLACK	34.5/37.5 [876/953]	.50 [12.7] SKIN
WHITE	34.5/37.5 [876/953]	.50 [12.7] SKIN
COLOR	LENGTH	TERMINAL OR STRIP LENGTH

LEAD DATA

REGAL−BELOIT CORPORATION (RBC) PROVIDES TECHNICAL ASSISTANCE TO OUR CUSTOMERS IN SEVERAL AREAS. SINCE RBC DOES NOT RECEIVE ALL DATA CONCERNING THE USE AND APPLICATION OF THE MOTOR, THE SUITABILITY OF THE MOTOR FOR THE APPLICATION MUST BE DETERMINED BY THE CUSTOMER.

DIMENSIONS WITHOUT TOLERANCES ARE FOR REFERENCE ONLY.

MAIN FRAME − OLE	ENCLOSED
END FRAME − OLE	ENCLOSED
MAIN FRAME − LE	ENCLOSED
END FRAME − LE	ENCLOSED

ENCLOSURE

CUSTOMER	EconoMaster

DRAWING REVISION F	REVISION BY NANCY.LIU	DATE 06−18−2020
ECO ECO−0187955	APPROVED BY KEYUN.GONG	DATE 06−18−2020
ECO DESCRIPTION SEE ECO		

COPYRIGHT REGAL BELOIT AMERICA, INC. ALL RIGHTS RESERVED.
PROPRIETARY AND CONFIDENTIAL INFORMATION − THIS DOCUMENT IS THE PROPERTY OF REGAL BELOIT AMERICA, INC. ("OWNER") AND CONTAINS OWNER'S PROPRIETARY INFORMATION. ANY PERSON, CORPORATION OR OTHER FIRM RECEIVING IT IS DEEMED, BY RECEIVING IT, TO AGREE THAT IT, AND/OR ANY PART OF IT, SHALL NOT BE DISCLOSED TO ANY PERSON, CORPORATION OR OTHER ENTITY, DUPLICATED, AND/OR USED, EXCEPT AS EXPRESSLY APPROVED IN WRITING IN ADVANCE BY OWNER. THIS DOCUMENT SHALL BE RETURNED TO OWNER UPON REQUEST. IT MAY BE SUBJECT TO CERTAIN RESTRICTIONS UNDER APPLICABLE EXPORT CONTROL LAWS AND REGULATIONS.

DRAWN BY: C.ZHANG	Regal Beloit America, Inc.
DATE: 12−24−2012	
APPROVED BY: T.ZHAO	DESCRIPTION MODEL−RFHP−48FR OUTLINE
DATE: 12−24−2012	
PROCESS/FINISH −	MATERIAL −
THIRD ANGLE PROJECTION	SIZE C / DWG NO EM3465F / SHEET 1